APPROVED BY:

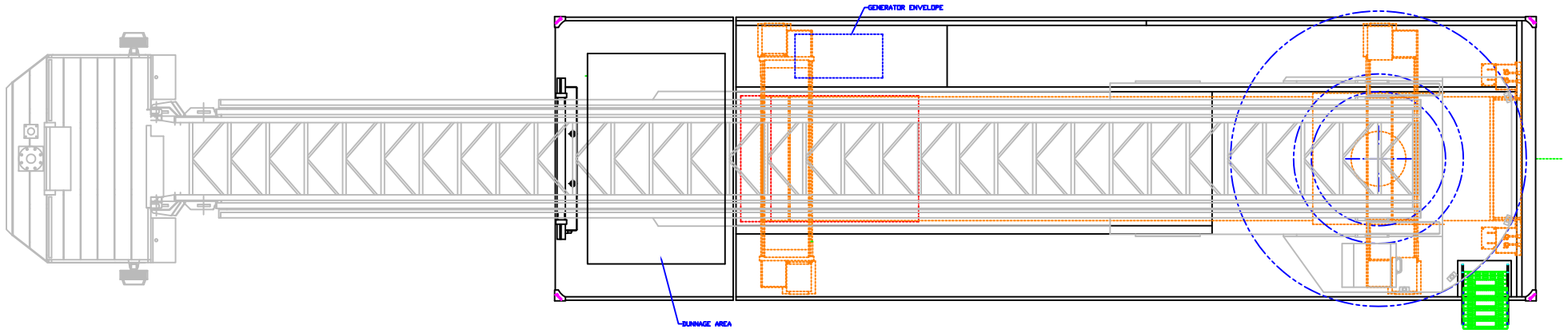

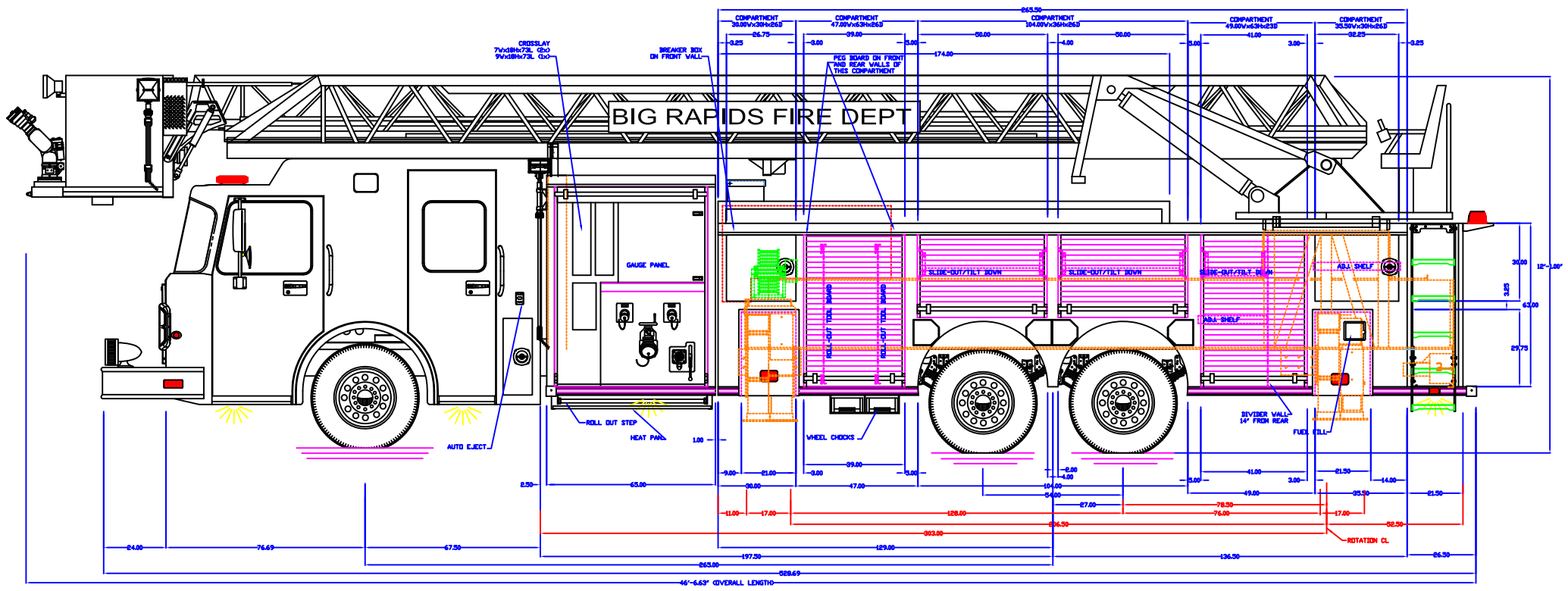

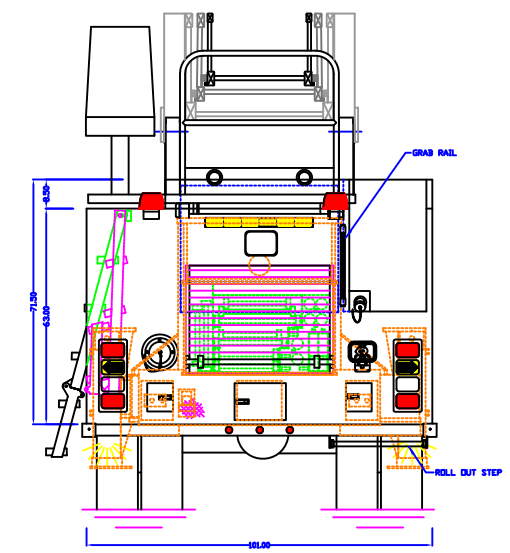

NOTE: LADDER- 101' RK MFG PLATFORM

TANK CAP- 300 GAL POLYPROPYLENE

30 GAL CAP FOAM CELL

PUMP CAP- 1500 GPM

DIMENSIONS SHOWN ARE APPROXIMATE AND ARE SUBJECT TO MINOR DEVIATIONS DURING CONSTRUCTION

NOT ALL ITEMS IN SPECS ARE SHOWN ON THIS PRINT

COMPARTMENT INTERIORS LINER MATERIAL

BODY CONSTRUCTED OF 3/16 AL

SIDE PUMP PANELS STAINLESS STEEL

NFPA UPPER LIGHT PACKAGE- WHELEN
NFPA LOWER LIGHT PACKAGE- WHELEN

HOSEBED-
55 CU FT MINIMUM CAP
LOAD- 800"x5"

ONAN 10KV GENERATOR INSTALLED

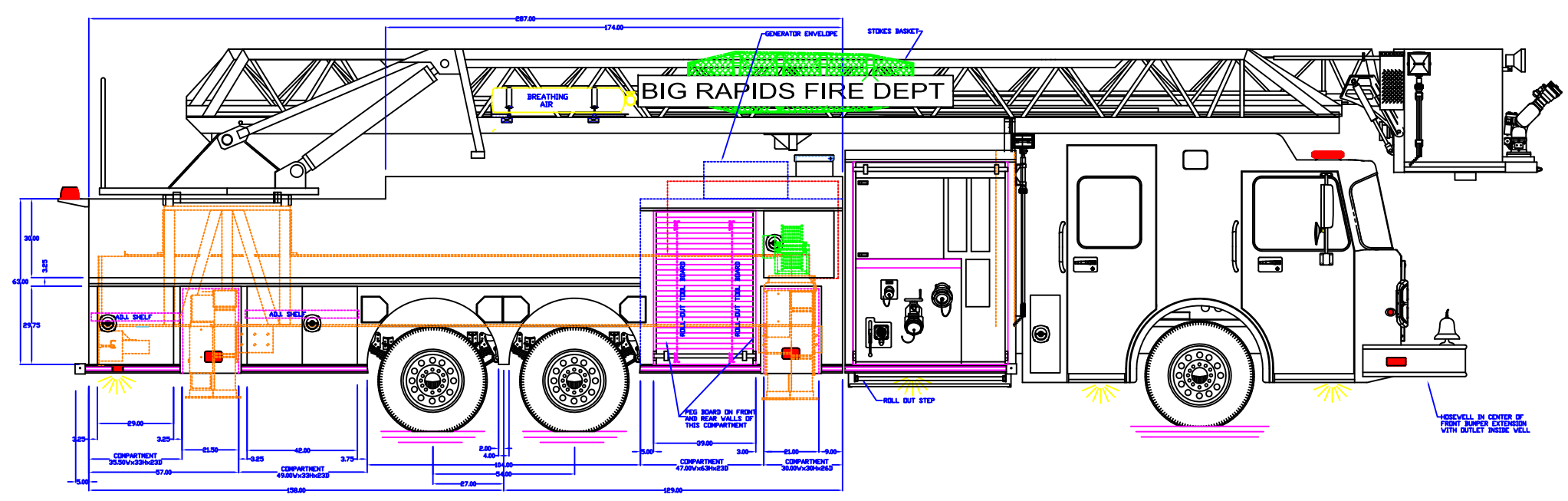

NONE	MAXIMUM HEIGHT	
NONE	MAXIMUM LENGTH	
101"	BODY WIDTH	CENTRAL

BIG RAPIDS, MI
101' COBRA

0 12" 24" SCALE: REF. ONLY

DRAWING NUMBER: big rapids, mi 100p-cobra style